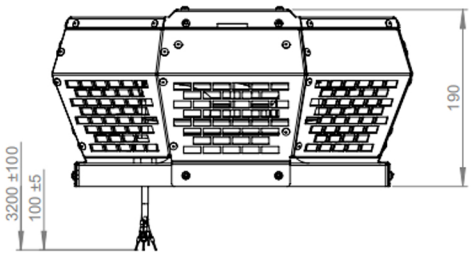
190
3200 ±100
100 ±5

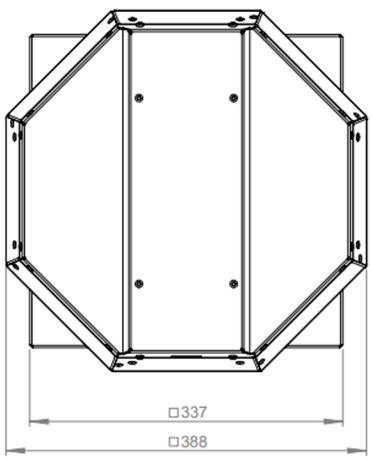
□337
□388

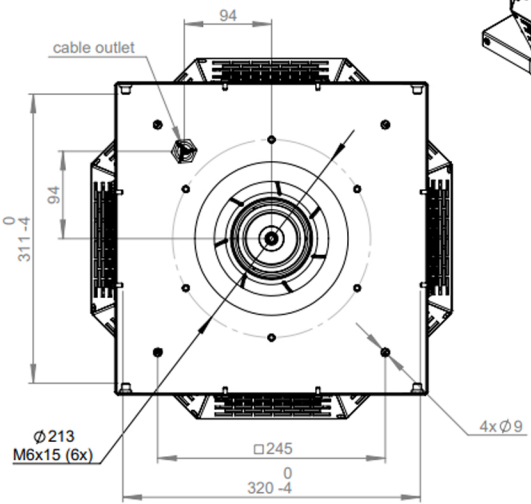
94
cable outlet
94
0
311 -4
Ø 213
M6x15 (6x)
4x Ø 9
□245
0
320 -4

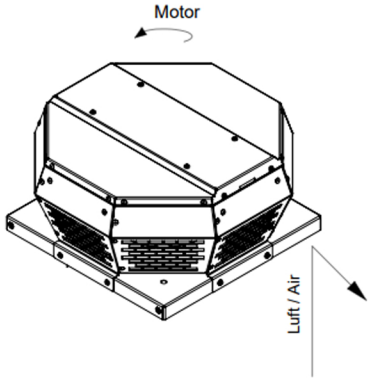
Motor
Luft / Air