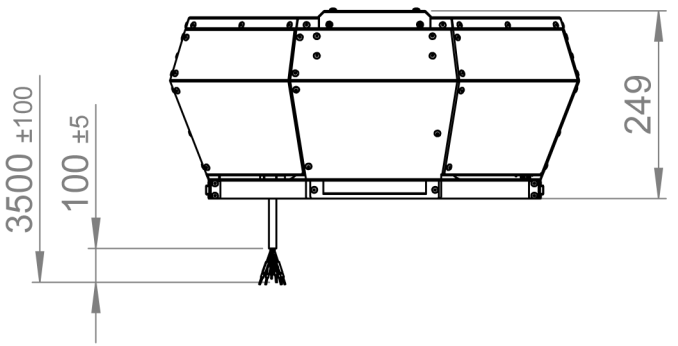
3500 ±100
100 ±5
249

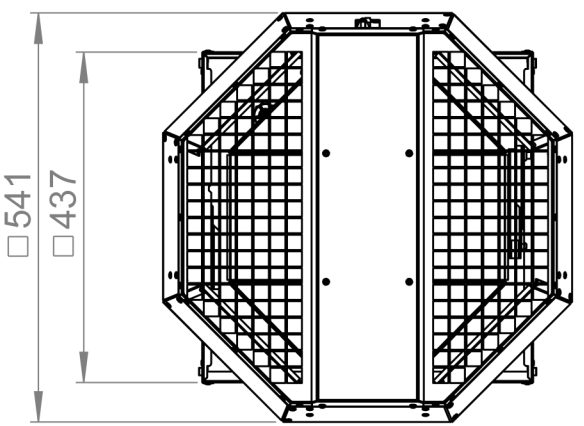
□541
□437

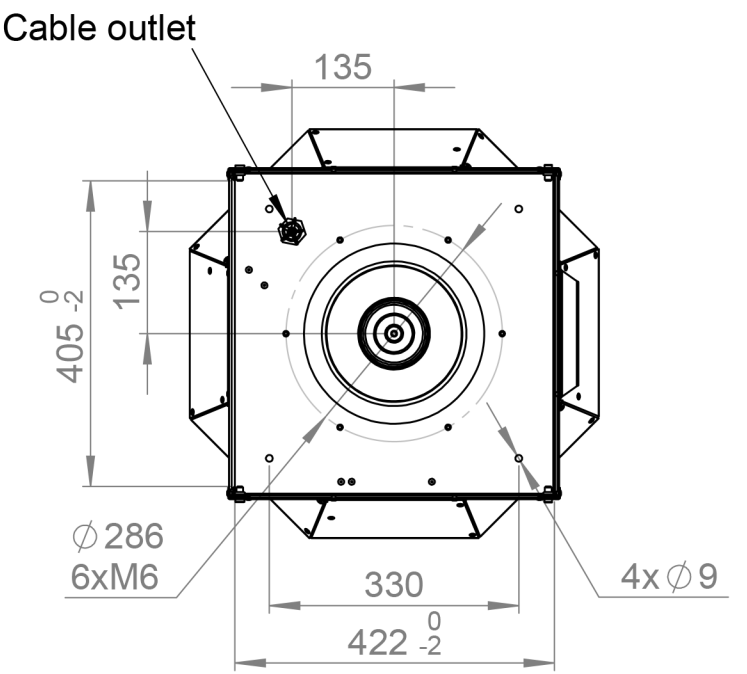
Cable outlet
135
135
405 0 -2
∅286
6xM6
330
422 0 -2
4x∅9