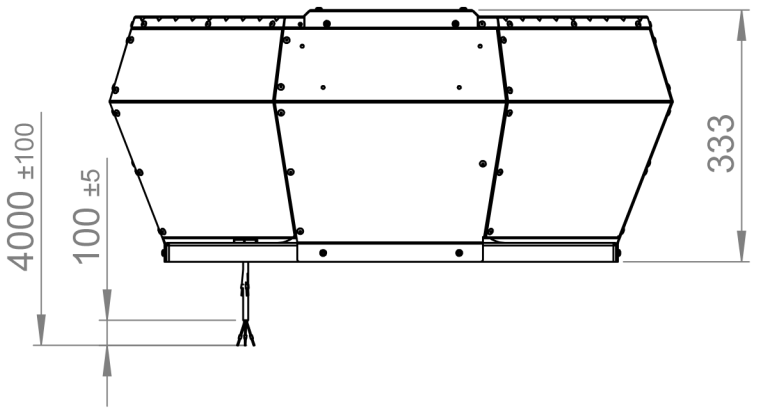
4000 ±100
100 ±5
333

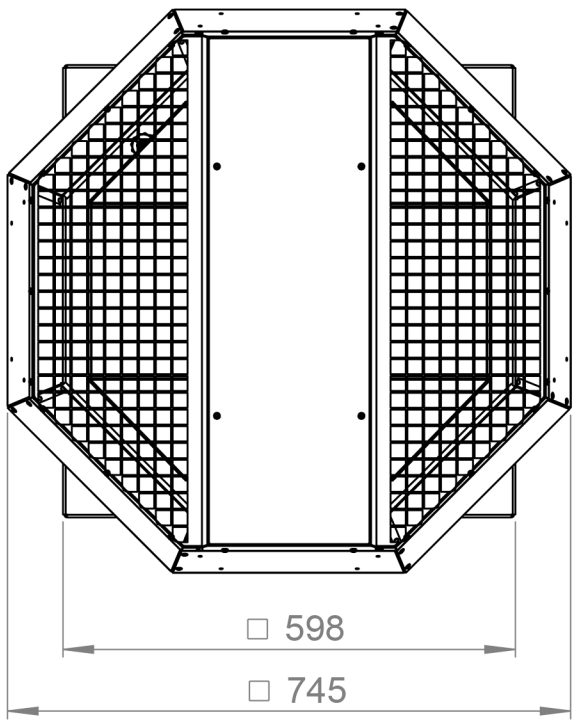
□ 598
□ 745

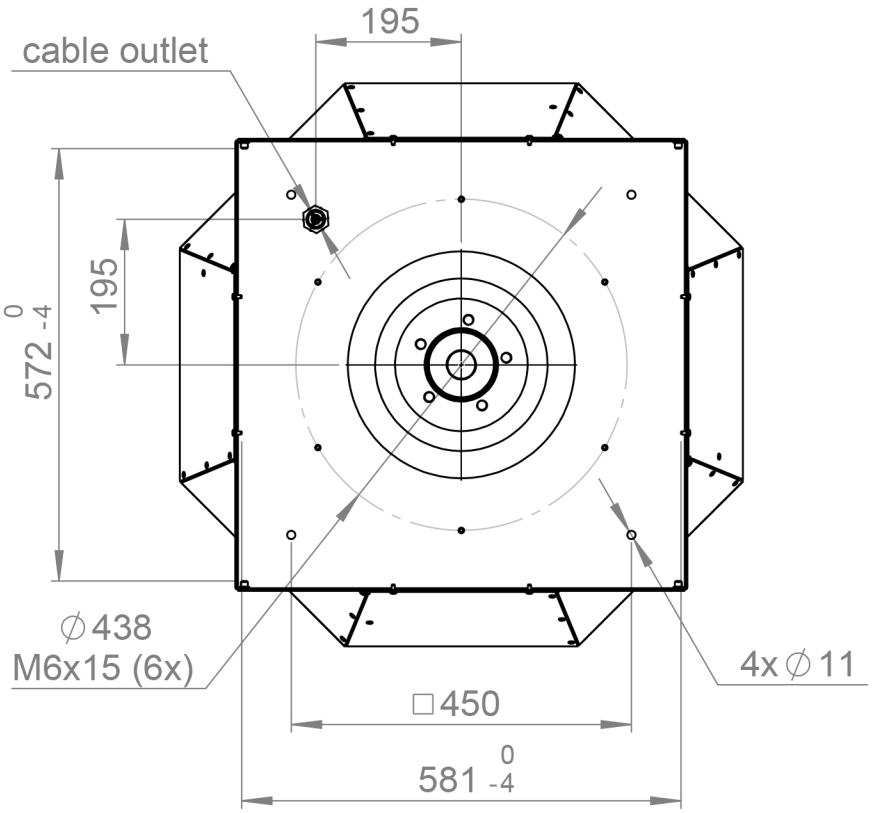
cable outlet
195
195
572 0 -4
∅438
M6x15 (6x)
4x∅11
□450
581 0 -4