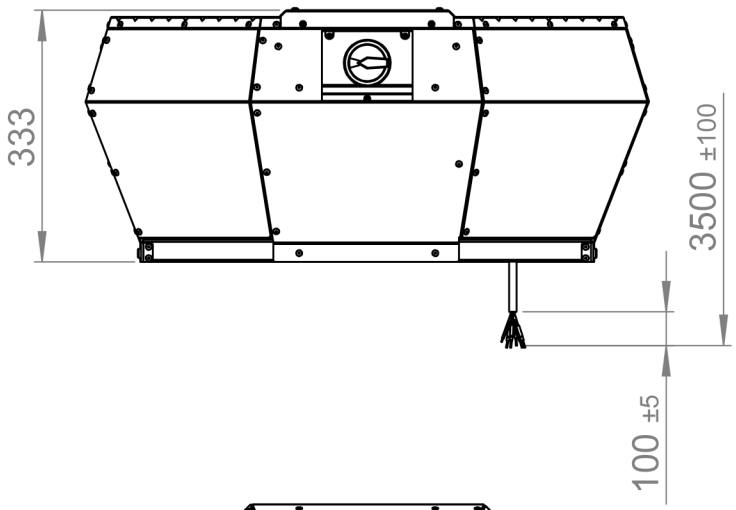
333
3500 ±100
100 ±5

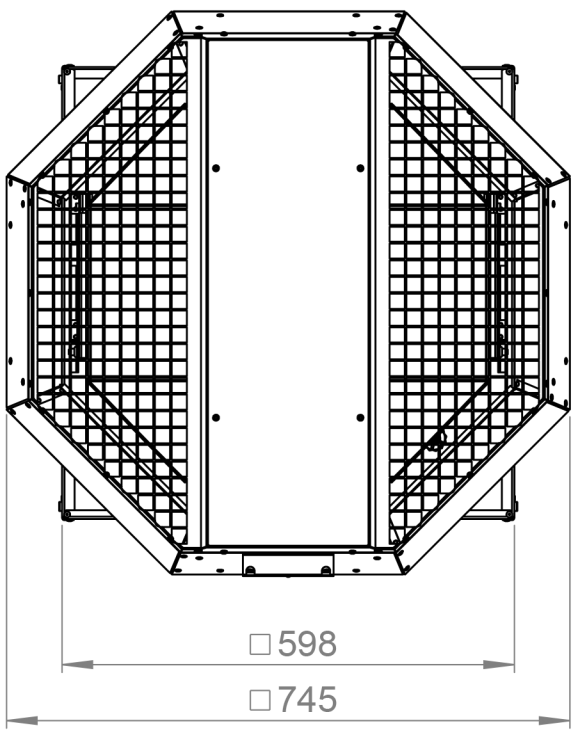
□598
□745

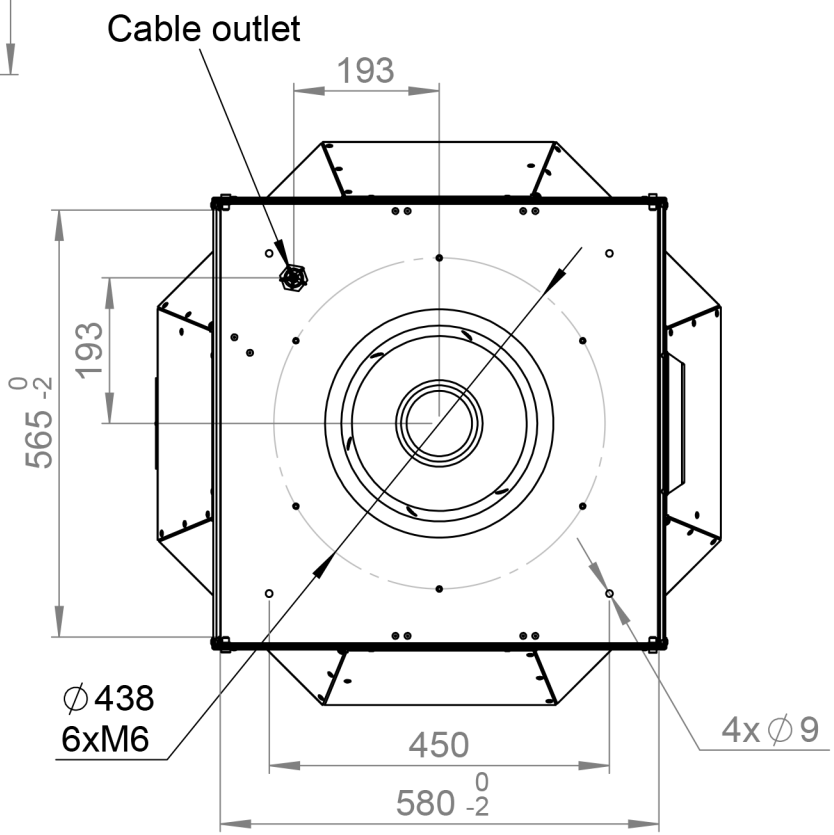
Cable outlet
193
193
565 0 -2
∅438
6xM6
450
580 0 -2
4x∅9